Powering a Cleaner Planet

BUSINESS PLAN

March 2013

Potential Difference, Inc.
7582 Las Vegas Boulevard South
Suite 219
Las Vegas, NV 89123

URL: www.potentialdifference.com
Email: info@potentialdifference.com

CONFIDENTIALITY STATEMENT

The information and data embodied in this business plan are proprietary and confidential, and are supplied with the understanding that they will remain confidential and will not be disclosed to third parties without the prior written consent of Potential Difference, Inc.

Plans and projections are subject to change.

Revolutionizing the Battery Charging Industry

Semi-Finalist:
2011 Clean Tech Open national competition

PDI is one of only 30 companies selected nationwide by U. S. Department of Energy's National Renewal Energy Laboratory to present at its annual Industry Growth Forum, the nation's premier entrepreneurial event.

The Department of Energy Small Business and Clean Energy Alliance Partnership Program awarded PDI technical assistance from the San Antonio Clean Energy Incubator at the University of Texas at San Antonio's Texas Sustainable Energy Research Institute.

One of 100 clean tech companies selected for the 2011 Entrepreneurial Mentoring Corps by the Clean Energy Trust through Startup America Partnership, a White House Initiative.

Table of Contents

1. EXECUTIVE SUMMARY i

1.1 Overview i

1.2 Urgent demand for advanced battery charging methods i

1.3 Problem: Slow, expensive and sometimes dangerous battery charging i

1.4 Solution: PDI's revolutionary ultra-fast charging technology i

1.5 Efficacy of PDI's charging technology has been rigorously tested iii

1.6 Regulatory environment iv

1.7 Market size and potential growth v

1.8 Other market observations v

1.9 PDI's ultra-fast battery charging technology v

1.10 Sales and Marketing vii

1.11 Initial target customers viii

1.12 Competition and Competitive Advantages viii

1.13 Top Passenger Electric Vehicle Charging Competitors ix

1.14 Industrial Electric Vehicle Charging Competitors x

1.15 Competitive Advantage xi

1.16 The Technology behind PDI's Advantages xi

1.17 Advantages for U. S. Government Prime Contractors xii

1.18 Operating Plan xii

1.19 Company and Management xiii

1.19 Management Team xiv

1.20 Financial Summary xvii

2. PROBLEM AND MARKET OPPORTUNITY 1

2.1 Overview 1

2.2 Urgent Demand for Advanced Battery Charging Methods 2

2.3 Problems with Existing Battery Chargers 3

2.4 Solution: PDI's Revolutionary Ultra-Fast Chargers 4

2.5 Efficacy of PDI's Ultra-Fast Charging Technology 7

2.6 Regulatory Environment 7

2.7 Market Size and Potential Growth 8

2.8 Other Market Observations 14

3 PDI's Ultra-Fast Charging Technology 15

3.1 The PDI Platform 15

3.2 PDI's Ultra-Fast EV Battery Charging Technology 15

3.2 PDI's ultra-fast mobile device charging technology 17

3.3 Future Product Development 17

3.4 Intellectual Property 18

4 Sales and Marketing 19

4.1 Market Segmentation 19

4.2 Go-to-Market Strategy 19

4.3 Initial Target Customers 20

4.4 CRM and brand-building 21

5 Competition and Competitive Advantages 23

5.1 Passenger Electric Vehicle Charging Competitors 23

5.2 Industrial Electric Vehicle Charging Competitors 24

5.2 Competitive Advantage 25

Advantages over Other Rapid Charge Methods 26

5.4 The Technology behind PDI's Advantages 26

5.4 Why It Works 27

6 Operating Plan 28

6.1 Growth Strategy 28

6.2 Market Leadership Strategy 28

6.3 Facilities 28

6.4 Product Design and Engineering 28

7 Company and Management 29

7.1 Company 29

7.2 Management Team 29

7.3 Independent Directors 30

8 Financial Information 31

8.1 Assumptions 31

8.2 Forecasts 31

8.3 Financing and Exit Strategy 31

APPENDIX 32

I. The Battery Charging Technology ..... a

II. Prototype Testing c

Measures and Measurement Devices c

Results ..... d

Testing at NACCO Materials Handling Group ..... e

Temperatures Maintained During above Tests ..... e

Demonstration at a Major Fast Food Service Logistics Company ..... f

1.0 Demonstration Setup ..... f

2.0 Prototype Demonstration ..... h

3.0 Summary i

III. Exclusive License to Rapid Charging Patents ..... j

IV. Amendment Allowing Sublicenses ..... y

1. EXECUTIVE SUMMARY

1.1 Overview

Potential Difference, Inc. (PDI) is a clean technology company that has developed the new Gold Standard for charging electric passenger and industrial vehicles, mobile device and solar and wind farm batteries through a patented and rigorously tested algorithm. PDI's technology has been proven to outperform all known battery charging competitors.

The company will employ a variety of strategies to efficiently and effectively lead in the marketplace by marketing chargers and licensing its technology to solar and wind farm operators, manufacturers of batteries, residential and commercial charging stations, automobiles and mobile devices such as laptops and cell phones and digital cameras.

1.2 Urgent demand for advanced battery charging methods

As the world shifts from gas-powered to low emissions vehicles, and as solar and wind farms proliferate, the need for faster, safer, more efficient battery recharging capability is critical. For example, to spur faster adoption of electric automobiles, charging stations must provide re-charge times that are fairly similar to gas refueling. And they must use off-the-shelf batteries, rather than expensive fast-charging batteries that have uncertain future availability. PDI's technology can accomplish that.

1.3 Problem: Slow, expensive and sometimes dangerous battery charging

All battery chargers are not created equal. Traditional slow chargers take as long as 14 hours to fully recharge a vehicle battery. Rapid chargers do it in two hours. The highest speed chargers, called "ultra-fast," can perform the same task in as little as 12 minutes. A considerable drawback for most rapid and ultra-fast chargers for industrial vehicles is that they can overheat, release toxins into the air or workplace and damage batteries. PDI is the only company with technology that overcomes this problem.

1.4 Solution: PDI's revolutionary ultra-fast charging technology

Potential Difference technology safely recharges off-the-shelf batteries in as few as 12 minutes without overheating, eliminating the concern of environmental and safety hazards for humans and damage to batteries. Our first step in creating an optimized fast charging algorithm was to create an accurate battery model on which to base the charging decision. The proposed battery model was based on creating an equivalent circuit model (ECM) over several operating temperatures and states of charge.

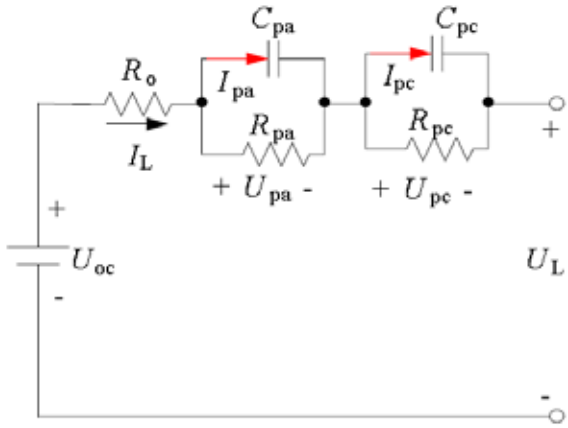

Figure 1: Example Battery Model

$$U_L = U_{oc} - U_{pa} - U_{pc} - I_L R_o$$

$$\dot{U}_{pa} = -\frac{U_{pa}}{R_{pa}C_{pa}} + \frac{I_L}{C_{pa}}$$

$$\dot{U}_{pc} = -\frac{U_{pc}}{R_{pc}C_{pc}} + \frac{I_L}{C_{pc}}$$

Figure 1: Mathematic Representation of Battery Model

Figure 1 is an equivalent circuit model representation of a battery. The model is a five-component dual impedance type model that is commonly used within the automotive industry. The variables in the model are ohmic resistance R_o, concentration polarization represented by R_{pa} and C_{pa}, and the electrochemical polarization represented by R_{pc} and C_{pc}. The model with a given set of parameters is only valid for a particular state of the battery, mainly defined by the temperature and SOC. A model that can be effectively used to optimize the charging process of the battery must be accurate over a range of temperatures and SOCs.

Our unique charging algorithm enables battery ions to disperse evenly on an ongoing basis throughout the charge, continually monitoring temperature, voltage, and charge acceptance. From that feedback, the parameters of the algorithm adjust and reduce heat-generating charge acceptance problems.

Utilizing the battery models, the charging algorithm is optimized for each battery chemistry. The optimization goal is to minimize heating per unit energy charged, while simultaneously keeping the electrochemical polarization below a level that will cause lithium plating. Therefore, the charging of a battery is not based on a constant charge input, but rather on an adaptive charge input based on the state of the battery.

During the charge process, the charge current is continually modified to maintain safe operating temperatures for the given chemistry while providing the maximum charge current that can be applied at a given point of time. Periods of rest (open circuit voltage), as well as reverse polarization, are applied when it allows for greater efficiency of charge acceptance by the battery.

1.5 Efficacy of PDI's charging technology has been rigorously tested

The initial testing and prototyping of our technology was successfully completed at the Georgia Tech Research Institute (GTRI) Aerospace, Transportation and Advanced Systems Laboratory (ATAS) under the supervision of battery and charging expert Dr. Yi Ding, who is the primary inventor of record on the two patents. As a result, we can confidently say that PDI's patented technology can have a transformative effect on the transportation industry by:

1) Removing the key barriers to the transition from fossil fuel to electricity for vehicles,

2) Improving the slow refueling time, and

3) Reducing drivers' range anxiety.

PDI Founder and CTO Elliott Small with PDI's ultra-fast industrial vehicle charger prototype.

Faster charge times reduce the amount of energy storage required, and allow some batteries to be made smaller. As the number of charging stations grows, our ultra-fast charging technology can more than double the stations' revenue by enabling more automobiles to be charged per hour. This is important not only to the general public, but also to corporations with fleets. Companies have fiscal concerns about the productivity of their human and vehicular assets.

Our charge time of 12 minutes for off-the-shelf batteries not only outperforms the current 30-minute state-of-the-art charger; it is similar to the time it takes to fill a tank with gas. As lithium-ion chemistries improve, we can only deliver better results.

For industrial vehicle users, PDI's patented, ultra-fast laboratory- and industry-tested charging technology fully eliminates the need for battery swapping and avoids the dangers of overheating, as demonstrated during subsequent testing of PDI's industrial vehicle charging application.

Our prototype was successfully tested in the R&D laboratories of the nation's largest forklift manufacturer, NMHG Holding Co., a subsidiary of publicly traded NACCO Industries of Mayfield Heights, Ohio. NMHG designs, engineers, manufactures, sells, services and leases forklifts and aftermarket parts under the Hyster and Yale brand names. Hyster-Yale reported FY 2012 revenues of $2.537 billion.

Battery	Chemistry	Chemistry Application	Charge Range	PDI Time	PDI Temp	Mfr. Max. Safe Temp	Normal Times
Thundersky 3.2V, 60Ah	Lithium-Ion	**Cars and Mobile Devices**	20% - 80% 20% - 100% 0% - 100%	12 mins. 16 mins. 19 mins.	42° 46° 46°	85°	**Slow charge:** ± 3 hrs / devices ± 8 hrs / cars
Trojan 24TMX 12V, 85Ah	Flooded Lead Acid	**Small Electric Vehicles**	20%-100%	31 mins.	49°C		**Fast:** ±1 hr / devices ±30 min / cars *(from 20-80%)*
Trojan T-105 6v, 225ah	Flooded Lead Acid	**Electric Vehicles**	20%-100%	68 mins.	44°C	49°C	**Slow:** ±8 hours
Exide GNB 48v/700ah	Flooded Lead Acid	**Forklift Truck**	20%-80% 20%-100%	90 mins. 2 hrs.	48°C 55°C	49°C 60°C	**Fast:** 2 to 3.5 hrs

Upon completion of the PDI tests, NMHG's Chief Engineer Laurence Dunn positively concluded:

> ***"The charger has demonstrated significant improvement in battery charge rate over the capabilities of many other existing chargers with a known quality of battery."***

1.6 Regulatory environment

The adoption of increasingly strict U.S. corporate average fuel economy rules through 2025 supports the government's intention to spur production of electric vehicles. In addition to these federal regulations, states are getting serious about reducing emissions. California, for example, has just passed rules that require sales of rising numbers of zero-emission vehicles. According to Pike Research, although government support for electric vehicles (EVs) in Europe is waning, the increasing availability of vehicle charging infrastructure that enables vehicles to charge at home, at the workplace, and in public places is facilitating market growth.

1.7 Market size and potential growth

According to a new study by Verify Markets of San Antonio, Texas, the demand for electric vehicles will create a multi-billion dollar business opportunity for charger manufacturers before the end of the decade. The market research report declares that the North American electric vehicle charging industry will grow rapidly over the next five to seven years, reaching $3.09 billion by 2017.

The global battery chargers market will exceed $11.9 billion by 2015, according to a recent report by Global Industry Analysts, Inc. Their research cites several key factors influencing market growth, including demand for rechargeable batteries from telecommunications and information technology end-use segments, new technologically advanced products, and increased demand from developing markets, including Asia-Pacific, Latin America, Eastern Europe, and Middle East.

PDI is ideally positioned to capitalize on the explosive growth and improving health of the EV and battery charging industries by offering state-of-the-art technology that will enable some EV and battery charger manufacturers to leapfrog over their competitors.

1.8 Other market observations

Toyota has become the latest maker to test the technical capabilities and consumer interest in battery-powered vehicles by partnering with car-sharing companies. Other makers that have or will put electric vehicles in such operations include Ford, Smart, Mercedes-Benz and BMW. Some industry analysts believe car-sharing and fleet markets, rather than retail demand, will be the initial foundation for a U.S. electric vehicle industry. The charging infrastructure for these fleets, whose customers rely on quick turnaround time of available vehicles, are ideally suited for chargers with PDI technology inside.

1.9 PDI's ultra-fast battery charging technology

PDI's revolutionary ultra-fast charging technology safely and efficiently satisfies the recharging needs of electric passenger, industrial, military and airport ground support vehicles; electric golf carts, forklifts, solar and wind farms, consumer electronics and cordless tools. Our revolutionary algorithm enables battery charger manufacturers to package our technology to deliver superlative performance to their clients.

Passenger and Industrial Electric Vehicle Battery Chargers

PDI's ultra-fast battery charging technology for electric vehicles allows users to recharge acid lead batteries from 20% to 100% in 31 minutes, and lithium-ion batteries without

overheating, which reduces cycle life—a major concern in the industry. We can also charge lithium-ion batteries from 20% to 100% in 16 minutes or 20% to 80% in 12 minutes.

Mobile Device Battery Chargers

We have two mobile device battery charging products: The first is an after-market charger that can be sold directly to consumers. It will be in production by the end of the third quarter 2013.

The technology developed for our ultra-fast battery recharge systems also can be transformed into a charging semiconductor integrated circuitry for mobile devices.

Future Products

PDI plans to maintain its technological edge by preparing to power the next generation of batteries. For example, researchers at the Toyota Research Institute of North America reportedly conducted promising experiments that used a magnesium-ion battery with a new kind of anode, made of tin, and the same type of electrolytes used in lithium-ion batteries.

Magnesium is much more common in nature than lithium, which would mean significantly cheaper batteries—previously a very costly component of EVs. Lower prices could spur sales. Also, because of the magnesium ion's two positive charges, as opposed to the lithium-ion's one, it is thought that magnesium batteries could have a higher energy storage capacity than their lithium counterparts.

According to *Smart Planet* (Nov. 29, 2012), this technological advance isn't something for which we have to prepare instantly. Industry researchers note that even if all the research proves successful, magnesium batteries may not be commercially available for another ten years. However, we will be watching for this and other changes, so that we can maintain our competitive advantage in the marketplace.

Intellectual Property

On July 31, 2008, Georgia Tech Research Corporation (GTRC) awarded Potential Difference, Inc. an exclusive, nontransferable license to commercialize two U.S. patents: 6,094.033, Battery Rapid Charging and Reconditioning Technique, the subject of GTRC Invention Disclosure number 1886 and 6,229,285, Rapid Detection Technique for Battery's State of Charge, the subject of GTRC Invention Disclosure number 1924. Nothing in the license agreement creates a partnership or joint venture between GTRC and PDI.

In consideration, PDI must pay GTRC royalties at the rate of four percent (4%) of the net selling price of products sold, quarterly on a calendar year basis. A minimum $5,000 payment is due on July 31, 2013 and a minimum of $10,000 each subsequent year to retain the license.

Additionally, founder and CTO Elliott Small has a patent pending for an associated ultra-fast battery-charging patent. This new intellectual property will enable us to extend the life of the current patent protection, providing additional and longer level competitive advantages.

1.10 Sales and Marketing

PDI's technology is the Gold Standard in battery charging. It has the power—literally and figuratively—to rejuvenate a variety of industries. By developing different sales and marketing strategies for each target market, ranging from sublicensing our patented technology to battery charging manufacturers to selling and distributing after-market mobile device chargers online, we believe we can easily become the market leader in the battery charging industry. Our target markets fall into six major categories:

- Electric Passenger Vehicle Battery and Charging Station Manufacturers
- Electric Industrial Vehicle Battery and Charging Station Manufacturers
- Consumer Electronics/Mobile Device Manufacturers
- Consumer Electronics/Mobile Device Battery Charger Consumers
- U.S. Military Procurement Officers
- Solar and Wind Farm Operators

PDI will market and sublicense our technology to the industry leading manufacturing companies in each target market. To date, we generated serious interest from Aerovironment, a federal government contractor that also manufactures home EV charging systems.

Ultra-Fast Consumer Electronics Battery Charging Technology

Currently, we have two exciting developments in the consumer electronics segment: First, multinational semiconductor chip manufacturer Intel has indicated interest in incorporating our technology in integrated circuits for products they sell to manufacturers of mobile devices such as cell phones and tablets. We would sublicense our technology to them in a "PDI inside" deal.

Intel's interest was conditioned on cycle tests to determine how well batteries respond to our charging technology over repeated cycles. That test, which is valued at more than $20,000, is underway now at the Department of Energy's National Renewable Energy Laboratory. NREL is the only federal lab dedicated to the research, development, commercialization and deployment of renewable energy and energy efficiency.

Secondly, we have formed an agreement with a battery charger manufacturer to produce after-market PDI battery chargers for current owners of devices that want to re-charge them in 12 minutes. These will be in production during the third quarter of 2013.

Tech gurus David Pogue of the *NY Times* and Kevin Tofel of gigaom.com have agreed to review the chargers in their publications. The large following of these two and others is anticipated to drive sales. We will establish distribution and fulfillment deals with brick-and-mortar and online consumer electronics retailers that will order directly from our exclusive manufacturer.

1.11 Initial target customers

Automotive Industry	Industrial Vehicle and Power Generation Industry	Consumer Electronics Industry
1. Automobile manufacturers: foreign, domestic	1. Forklift manufacturers: foreign, domestic	1. Semiconductor chip manufacturer(s)
2. Automobile battery manufacturers	2. Forklift battery charger dealers	2. Consumer electronics wholesalers
3. Battery charging station manufacturers	3. Forklift battery online retailers	3. Consumer electronics retailers
4. Municipal and commercial battery charging station buyers and owners	4. Warehouse retailers	
5. Fleet buyers: corporate and car-sharing, and more	5. Country clubs, parks and other golf cart buyers	
	6. Airline ground support equipment buyers	
	7. Solar and wind farm operators	
	8. U.S. government contractors	
	9. U.S. military contractors	

1.12 Competition and Competitive Advantages

According to a December 30, 2012 Pike Research report, a surge of new companies has moved into the electric vehicle supply equipment (EVSE) market during the past 18 months. However, PDI has the only products that charge both off-the-shelf acid lead and

lithium batteries in a fraction of the normal time. We are the only company in the world with proven technology that does not damage or overheat batteries.

The EVSE market is expected to rise from just less than 200,000 units sold in 2012 to almost 2.4 million in 2020. The market is also entering a new phase in which it will be less dependent on government-funded deployments and thus required to present an attractive return on investment for potential EVSE operators.

1.13 Top Passenger Electric Vehicle Charging Competitors

Source: ***Pike Pulse Report: 4Q 2012*** Electric Vehicle Charging Equipment Assessment of Strategy and Execution for 14 Global Electric Vehicle Supply Equipment Companies

No EVSE Competitors' Technology Outperforms PDI's

The typical fast charge time for ChargePoint, Leviton, Aerovironment and Ecotality is around 30 minutes. DBT's charging stations recharge a car or truck in three to eight hours.

That's not all: Currently, in both hybrid and all-electric cars, when the brakes are applied, much of the energy that could be returned to the batteries by regenerative braking is lost because the batteries cannot receive charge fast enough to store all of that energy. Our ultra-fast technology can potentially help to overcome that problem and increase the all-electric driving range in both of these car types and the miles per gallon in hybrids. For plug-in battery charging, our technology can potentially charge the prevailing lithium manganese oxide or lithium iron phosphate batteries in 12 minutes, whereas others require the as yet unavailable and lower power density lithium titanate batteries.

1.14 Industrial Electric Vehicle Charging Competitors

PDI's competition is companies that sell chargers in the highest-performing category, "ultra-fast chargers." These products fully recharge industrial batteries in minutes. There are five major competitors in this space. By rank, they are:

1. AccelRate, which licenses its technology to Enersys subsidiary, Hawker
2. Aker Wade Power Technologies LLC
3. Minit-Charger
4. Aerovironment (Posicharge brand)
5. PowerDesigners, LLC

The Market Leader is an "Also Ran" when Compared with PDI

The stated mission of market leader Canadian-based AccelRate, which licenses its technology to manufacturing partners, is "to be a global industry standard in battery chargers." The company boasts that its "principal product is the world's most advanced high speed battery charging technology."

Most advanced? AccelRate's ultra-fast charging technology recharges in 30 minutes. PDI's does it in 12!

While AccelRate boasts that its charging technology reduces overheating, PDI's charger demonstrated during testing by the nation's largest forklift manufacturer that it *completely eliminated* the risk of overheating. For customers, it means that they will not have to replace batteries as often and do not have to be concerned with OSHA risks stemming from toxic fumes.

On a page that was recently removed from its site, AccelRate boasted that it "achieves 100% state-of-charge in 2 hours," claiming that its competition "only cycles the battery between approximately 40% to 80%." PDI's technology defeats AccelRate and its competition by accomplishing a 100% state of charge in less than one hour—saving both time and money for end-users.

In fact, PDI's charging technology outperforms industry leaders by every significant measure and sets new standards for battery charging:

1.15 Competitive Advantage

Attribute		AccelRate	Aker Wade	Minit-Charger	PosiCharge	Power Designers
Eliminates battery swapping	✓	✗	✗	✗	✗	✗
100% state-of-charge in less than an hour	✓	✗	✗	✗	✗	✗
Concurrent charge for four vehicles	✓	✗	✗	✗	✗	✗
Two-Hour concurrent full charge for two vehicles	✓	✗	✗	✗	✗	✗
Efficiently supports 2-3 shifts	✓	✗	✗	✗	✗	✗
NO battery overheating	✓	✗	✗	✗	✗	✗

1.16 The Technology behind PDI's Advantages

Proprietary interrogation pulse	A highly accurate approach for measuring state of charge (SOC) and battery condition. Detects battery status and charges battery accordingly
Computerized sequence of pulses	Recharging software measures changes in interrogation pulse to detect state of SOC and condition and provides specific amounts of power required at various stages of charging. Avoids electrochemical polarization and concentration polarization
Signal conditioning	Applied to charge wave-train to prevent overheating and gassing
Optimizes the charge delivery to the battery	Interrogation pulse / charging pulse sequencing charges battery before concentration polarization and electrochemical polarization can build up and slow down the charging process

Avoids battery damage	Measures and reacts to various battery parameters: o Equivalent circuit capacitance and resistance o Electrochemical overcharge o Maximum battery temperature o Maximum battery internal pressure o Inductance

1.17 Advantages for U. S. Government Prime Contractors

In addition to the fact that its technological superiority can also translate into greater profitability for our battery charger manufacturing customers and their end-users, PDI brings another unique advantage to the marketplace, particularly for the nation's top prime federal government contractors such as Aerovironment, GE, Schneider Electric, Siemens and Hawker battery maker Enersys: PDI is a minority-owned and controlled company. Subcontracting or joint venturing with PDI will enable these companies to achieve a strong competitive advantage when bidding on lucrative government contracts.

1.18 Operating Plan

The need for improved battery performance, higher workplace efficiencies, reduced operating costs, and lowered fossil fuel emissions demands that we make every effort to make our technology available to a variety of sectors. Consequently, we have devised an operating structure that fulfills the demand without stressing PDI to its limits.

We envision four distinct PDI operating units, each strategically located to best serve our customers, strategic partners, or leverage support services available for early stage enterprises:

- Consumer Electronics Battery Charging Technology: Corporate Headquarters
- Passenger Electric Vehicle Battery Charging: Potential Difference, Illinois
- Industrial Electric Vehicle Battery Charging: Rapid Charge Technology, Ohio
- U.S. Government and Military Procurement: PDI-USA, Washington DC area

The structure has not been finalized. In one scenario, a seasoned executive management team comprised of a President, Controller, Director of Business Development will lead each operating unit. PDII and RCT will report to PDI's Chief Financial Officer; PDI-USA and the Consumer Electronics Division will report to the Chief Operating Officer.

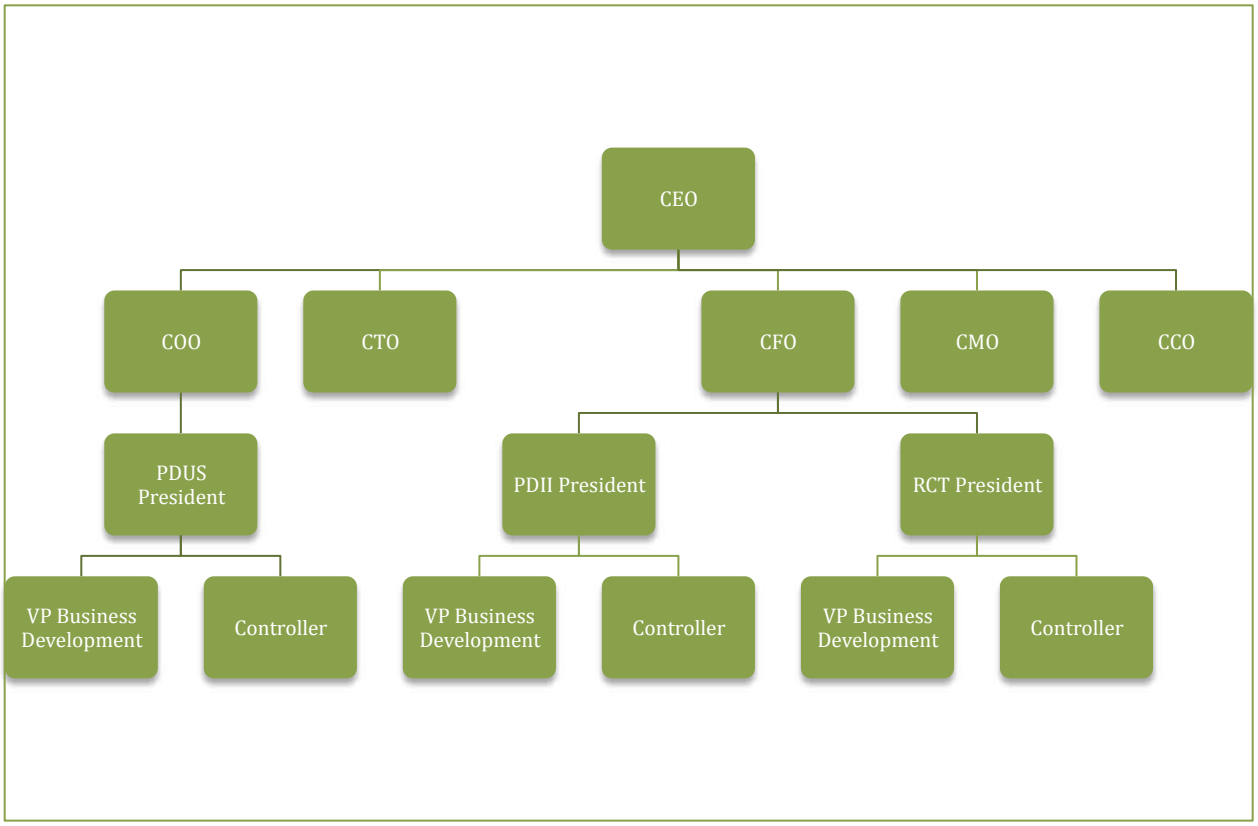

1.19 Company and Management

Potential Difference, Inc. is an early stage clean technology development corporation that is leveraging its exclusive license for patented industry changing battery-charging technology to commercialize products in several industries. To speed the route to market and to effectively manage the activities in each target market, the company has established divisions that will focus on specific markets.

PDI's initial focus will concentrate on the development and manufacturing of devices designed to meet the demand for the projected $8.1 billion ultra-fast recharge battery systems for the electric and industrial vehicle industries. These industries include automobiles, airport support vehicles, buses, power industrial trucks, tractors, trucks, solar and wind farms.

PDI is among 30 companies selected by U. S. Department of Energy's National Renewal Energy Laboratory to present at its annual Industry Growth Forum, the nation's premier event for startup energy companies. In 2011, PDI was named a national competition semi-finalist in Clean Tech Open. We were one of 100 Clean Tech Companies selected by the

Clean Energy Trust through Startup America Partnership, a White House Initiative, for the 2011 Entrepreneurial Mentoring Corps.

1.19 Management Team

Founder and CTO Elliott Small, developer of a high-end electric car conversion, former director of the Commerce Department-funded Technology Commercialization Center in Washington, DC, computer consultant, and chemist. Elliott has a patent pending on holds bachelor's degree in biochemical sciences from Harvard University.

CEO *(TBD):* Our CEO candidate must have a minimum of five years' experience in a C-level position with corporation comprised of multiple divisions or subsidiaries, or as a successful entrepreneur who grew an enterprise from a start-up to a $20+ M in revenues within five years; proven ability to manage growth and build and nurture relationships with strategic business partners; previous executive level experience with a software, electronics or clean technology company a plus.

Master's degree in business administration or electrical engineering preferred, or similar degree

<u>Areas of Responsibility</u>

- Strategy and Vision: Develop a strategy and vision for the company's future, including international branding and a pipeline of cutting edge product development.
- Programs, Product and Service Delivery: Oversee design, marketing, promotion, delivery and quality of our battery charging products and services.
- Allocation: Set budgets for the parent company and subsidiaries, oversee any investment planning and implementation, evaluate product lines for profitability, manage the company's capital, and establish ways to find potential investors.
- Human Resources Management: Effectively manage the human resources of Potential Difference according to authorized personnel policies and procedures that fully conform to current laws and regulations in each locale.
- Team Building: Organize and lead a seasoned senior management team

Chief Operating Officer *(TBD)*

The Chief Operating Officer will oversee all Operations functions at all PDI divisions. The COO is responsible for managing all hands-on operational aspects of the company. This role

collaborates with the President & CEO to develop corporate and operational strategies, and is charged with facilitating these efforts across Operations.

Through a respectful, constructive and energetic style, guided by the objectives of Potential Difference, the COO provides the leadership, management and vision necessary to ensure that the Company has the proper operational controls, administrative and reporting procedures, and human resources systems in place to effectively grow the organization and to ensure financial strength and operating efficiency.

The COO oversees all customer facing positions (customer care, and professional services) as well as quality assurance, software development activities, and product management. Central to this role is building positive and lasting relationships between PDI and its customers.

Chief Financial Officer *(TBD)*

The chief financial officer position is accountable for the administrative, financial, and risk management operations of the company, to include the development of a financial and operational strategy, metrics tied to that strategy, and the ongoing development and monitoring of control systems designed to preserve company assets and report accurate financial results. Principal accountabilities are:

Planning

1. Assist in formulating the company's future direction and supporting tactical initiatives
2. Monitor and direct the implementation of strategic business plans
3. Develop financial and tax strategies
4. Manage the capital request and budgeting processes
5. Develop performance measures that support the company's strategic direction

Operations

1. Participate in key decisions as a member of the executive management team
2. Maintain in-depth relations with all members of the management team
3. Manage the accounting, human resources, investor relations, legal, tax, and treasury departments
4. Oversee the financial operations of subsidiary companies
5. Manage any third parties to which functions have been outsourced
6. Oversee the company's transaction processing systems
7. Implement operational best practices
8. Oversee employee benefit plans, with particular emphasis on maximizing a cost-effective benefits package
9. Supervise acquisition due diligence and negotiate acquisitions

Financial Information

1. Oversee the issuance of financial information
2. Personally review and approve all Form 8-K, 10-K and 10-Q filings with the Securities and Exchange Commission
3. Report financial results to the board of directors

Risk Management

1. Understand and mitigate key elements of the company's risk profile
2. Monitor all open legal issues involving the company, and legal issues affecting the industry
3. Construct and monitor reliable control systems
4. Maintain appropriate insurance coverage
5. Ensure that the company complies with all legal and regulatory requirements
6. Ensure that record keeping meets the requirements of auditors and government agencies
7. Report risk issues to the audit committee of the board of directors
8. Maintain relations with external auditors and investigate their findings and recommendations

Funding

1. Monitor cash balances and cash forecasts
2. Arrange for debt and equity financing
3. Invest funds
4. Invest pension funds

Chief Marketing Officer *(TBD)*

The Chief Marketing Officer leads marketing operations, sales operations, product management, partnership marketing, customer service and customer retention. As part of the marketing operations, he takes care of the company's media and industry relations, advertising, interactive programs, communications as well as market and customer research. Advertising responsibilities include overseeing trade show exhibiting, printed promotions and electronic promotions such as web sites and social media. He must ensure that the company's branding comes across in all media.

The CMO should have 10 or more years of senior leadership experience in marketing and sales management with a thorough knowledge of marketing principles, product or service management, sales and business development, along with a demonstrated track record of success and performance. This senior leadership position requires the ability to

understand changing market dynamics, translating them into actionable strategy and implementing the strategy to achieve pre-set objectives as determined by the marketing plan. The CMO should have experience in managing budgets effectively across multiple departments, financial reporting, setting up effective metrics and business processes. Knowledge and experience in the company's industry may be required or preferred.

Chief Communications Officer *(TBD)*

The CCO is responsible for the public relations aspect within an organization. Builds and sustains a company's reputation for quality, reliability, and customer satisfaction. Writes and delivers press releases and handles all communication sent to the public.

Primary responsibilities

- Manage the PDI brand and reputation.
- Ensure public views the organization favorably.
- Create and launch press releases and marketing campaigns.
- Contact members of the media to set up interviews with company reps.
- Ensure that all opportunities for the CEO are fully vetted.
- Drive corporate strategy and message development, pitch and announcement strategies.
- Develop branding initiatives, internal communications and external media relations.
- Determines communications strategy and execute programs to deliver communications objectives throughout the organization.
- Develop communication strategies for delivery of corporate culture and business strategy.
- Manage media relations and maximize media opportunities.
- Develop strong relationships with media reps.
- Develop delivery and packaging plans for corporate messages.
- Develop internal publications such as newsletters, releases, email announcements, planned publications, on-line, intranet, video, special projects and assignments.
- Create rich and creative content that is optimized for search engines.

1.20 Financial Summary

APPENDIX

I. The Battery Charging Technology

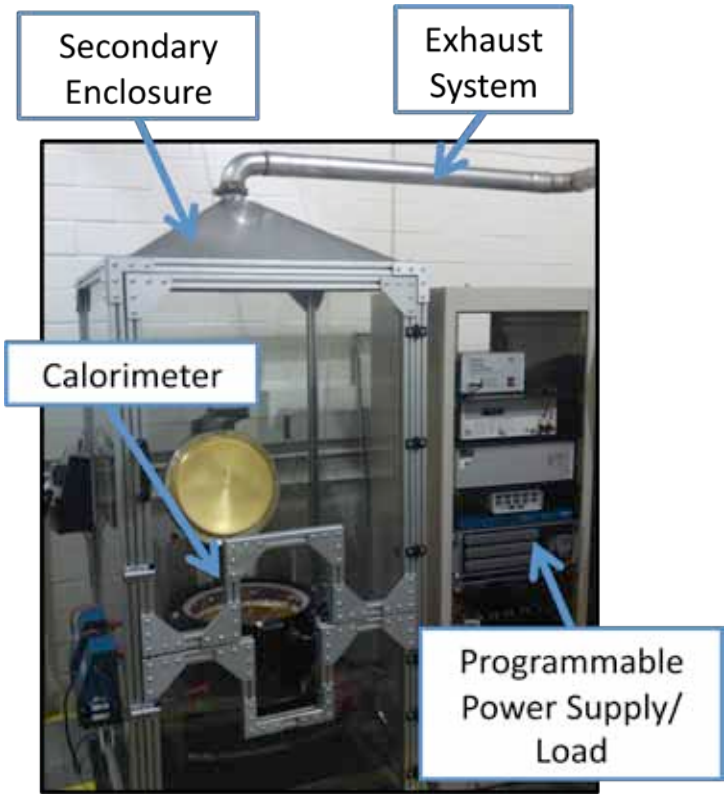

Large Format Battery Calorimeter

Effect of Algorithm on Cells

The immediate concern of fast charging is the impact of the charge method on battery life and safety. The optimized algorithms were tested for safety and life effects on the battery. It is important that not only is safety maintained during battery charging, but also that the effects of the fast charging algorithm do not cause premature degradation and deterioration of the battery, limiting its potential life.

The process for determining the effects of the charging algorithm on life was assessed by performing multiple fast charge and discharge cycles and testing the performance characteristics over time. After the cells were aged, a number of them were deconstructed and analyzed using XRD and TEM to determine the effect of fast charging on the battery materials.

The effect of the fast charging algorithm on the safety of the batteries was determined by the results of the deconstructive analysis. When no additional lithium plating was observed in cells that underwent the fast charging, compared with cells that were aged

under current slow charge methodologies, the fast charging algorithm demonstrated that it did not increase the risk of internal shorting.

Simplification of Models/Implementation

Algorithms proven to improve battery charge rates safely and efficiently were utilized to develop a linear approximation of a particular battery chemistry. This linear approximation provided the parameters for fast-charging a specific battery chemistry.

We did this for each battery chemistry model developed at the beginning of our research. Using the single chemistry linear approximations, we developed a simple process for making linear approximations that bridged battery chemistries, based on measurement inputs from a battery to be charged. This allowed our algorithm to become adaptive to multiple battery chemistries.

II. Prototype Testing

Measures and Measurement Devices

Experimental Prototype

An engineering consulting firm completed construction of our experimental prototype in October 2009. Testing was completed in January 2010.

The prototype has a total capacity of 16.6 kilowatts capable of variable outputs of 0 to 830 amps and 0 to 20 volts.

The prototype is equipped with an on-board computer to manage the proprietary charging algorithm and to provide a report for each charge session. The .csv file generated contains one row of data for every second of the charge session. The row contains voltage measured by the charger, amps of current measured by the charger, temperature measured by a thermocouple attached to the battery and connected to the charger, and time elapsed during each of three proprietary phases that occur during each second of the charge.

Production Size Prototype

The engineering consulting firm completed construction of our production sized prototype February 2011. Testing was completed in June 2011.

The prototype has a total capacity of 102.4 kilowatts with variable outputs of 0 to 1280 amps and 0 to 80 volts for industrial vehicles using lead acid batteries whose battery packs have dozens of volts and variable outputs of 0 to 200 amps and 0 to 512 volts for passenger vehicles using lithium ion batteries whose battery packs have hundreds of volts.

The prototype is equipped with an on board computer to manage the proprietary charging algorithm and to provide a report for each charge session. The .csv file generated contains one row of data for every second of the charge session. The row contains voltage measured by the charger, amps of current measured by the charger, temperature measured by a thermocouple attached to the battery and connected to the charger, and time elapsed during each of three proprietary phases that occur during each second of the charge.

Results

SUMMARY

Battery	Chemistry	Chemistry Application	Charge Range	PDI Time	PDI Temp	Mfr. Max. Safe Temp	Normal Times
Thundersky 3.2V, 60Ah	Lithium-Ion	EVs, Mobile Devices, Power Tools	20%-80% 20%-100% 0%- 100%	12 min. 16 min. 19 min.	42° 46° 46°	85°	**Slow charge:** ±3 hrs / devices ±8 hrs / cars
Trojan 24TMX 12V, 85Ah	Flooded Lead Acid	Industrial Electric Vehicles	20%-100%	31 min.	49°C		**Fast:** ±1 hr / devices ±30 min / cars *(from 20-80%)*
Trojan T-105 6v, 225ah	Flooded Lead Acid	Electric Vehicles	20%-100%	68 min.	44°C	49°C	**Slow:** ±8 hours
Exide GNB 48v/700ah	Flooded Lead Acid	Forklift Trucks	20%-80% 20%-100%	90 min.- 2 hrs.	48°C 55°C	49°C 60°C	**Fast:** 2 to 3.5 hrs

TESTING AT ENGINEERING CONSULTING FIRM (February to June 2011)
SMALL BATTERIES / Experimental Prototype Charger: 20 volt, 830 amp 16.6 kw

Results	Conventional	Battery	Chemistry	Application
20% to 100%: 31 min.	6-8 hrs or more	Trojan 24TMX 12v, 85ah	Flooded Lead Acid	Several industrial electric vehicles.
20% to 100%: 68 min.	6-8 hrs or more	Trojan T-105 6v, 225ah	Flooded Lead Acid	Most industrial electric vehicles
20% to 80%: 12 min. 20% to 100%: 16 min. 0% to 100%: 19 min.	Slow: 3 hrs or more Fast: 30 min.	Thundersky 3.2 v 60ah	Lithium Iron Phosphate	Electric automobiles

LARGE BATTERIES / Pre-Production Prototype Charger
Industrial Mode: 80 volt, 1280 amp 102.4 kw Automotive Mode: 512 volt 200 amp 102.4 kw

Results	Conventional	Battery	Chemistry	Application
20%-80%: 2 hrs	Slow: 6-8 hours Fast: 3.5 hours	Exide GNB 36v, 850ah	Flooded Lead Acid	Forklift Trucks

After a positive evaluation of the test data from the experimental prototype, NMHG contributed to testing costs and provided batteries.

Results exceeded NMHG's objective, 2.5 hours, by 30 minutes

Testing at NACCO Materials Handling Group

(June to October 2011)

NMHG is the nation's largest and the world's fourth largest manufacturer of forklift trucks. The company's brands are Hyster and Yale

LARGE BATTERIES / Pre-Production Prototype Charger
Industrial Mode: 80 volt, 1280 amp 102.4 kw Automotive Mode: 512 volt 200 amp 102.4 kw

Results	Conventional	Battery	Chemistry	Application
20 to 80%: 90 min.	Slow: 6-8 hours Fast: 3.5 hours	Exide GNB 48v, 700ah	Flooded Lead Acid	Forklift Trucks

TEMPERATURE CONTROL PROTECTS BATTERY LIFE

Temperatures Maintained During above Tests

Batteries Charged	Charge Time/ State of Charge Range	Manufacturers' Maximum Safe Charging Temperatures for Normal Battery Cycle Life	Maximum Temperatures During Charge
Trojan TMX Lead Acid 24V/85ah	31 minutes 20% to 100%	49° Centigrade (120° Fahrenheit)	**49°** Centigrade (120° Fahrenheit)
Thundersky Lithium Ion 3.2V/60ah	12 minutes 20% to 80%	85° Centigrade (185° Fahrenheit)	**42°** Centigrade (108° Fahrenheit)
Thundersky Lithium Ion 3.2V/60ah	12 minutes 20% to 100%	85° Centigrade (185° Fahrenheit)	**42°** Centigrade (108° Fahrenheit)
Thundersky Lithium Ion 3.2V/60ah	12 minutes 0% to 100%	85° Centigrade (185° Fahrenheit)	**42°** Centigrade (108° Fahrenheit)
Exide GNB 36v/850ah	2 hours 20% to 80%	60° Centigrade (140° Fahrenheit)	**48°** Centigrade (118° Fahrenheit)
Exide GNB 48v/700ah	90 minutes 20% to 80%	60° Centigrade (140° Fahrenheit)	**49°** Centigrade (120° Fahrenheit)

Demonstration at a Major Fast Food Service Logistics Company

The test site is a company that distributes to the world's most elite corporations in the quick service industry.

1.0 Demonstration Setup

A Battery Utilization Study was conducted to determine the frequency and duration of "down-time" available during each shift that could be available for opportunity fast charging. To facilitate this analysis, a battery monitor was installed on a forklift battery to monitor its utilization.

After the Battery Utilization Study was completed, a Rapid Charge Demonstration Model 200 was installed to provide a real-time analysis of its performance on the distribution facility floor.

1.1 Battery Utilization Study / Battery Monitor Data

A battery monitor was installed at the facility on February 16, 2011 and removed on February 27, 2011 for data analysis. The monitor was installed on an Exide GNB 36 volt 850 amp hour battery that was provided for the facility and kept with the same forklift truck throughout the 12 day data acquisition period. The battery was swapped with any available battery at the end the shift. After receiving a full charge on one of the pre-existing slow chargers in the battery swapping area, the test battery was re-inserted in the truck for another shift. Data was collected for battery discharge time and idle time on the truck in use and for charge time on the battery charger.

1.2 Results

Information provided by the battery monitor was tabulated and summarized. The table below indicates that in terms of frequency and duration, there is routinely more than enough time for opportunity fast charging. A more detailed version of the data is provided in the appendix at the end of this report.

Shift No.	Day	Date	Start Time	Shift Hours	Idle Hours
2	Wednesday	2/16/2011	2:00 PM	8	3.6
3	Thursday	2/17/2011	10:00 PM	8	6.0
2	Friday	2/18/2011	2:00 PM	8	5.7
3	Friday	2/18/2011	10:00 PM	8	6.7
1	Monday	2/21/2011	6:00 AM	8	4.0
2	Monday	2/21/2011	2:00 PM	8	2.1
3	Monday	2/21/2011	10:00 PM	8	6.2
1	Wednesday	2/23/2011	6:00 AM	8	3.4
2	Wednesday	2/23/2011	2:00 PM	8	4.3
3	Wednesday	2/23/2011	10:00 PM	8	5.5
1	Friday	2/25/2011	6:00 AM	8	4.1
2	Friday	2/25/2011	2:00 PM	8	5.7
1	Saturday	2/26/2011	6:00 AM	12	7.9
2	Saturday	2/26/2011	6:00 PM	12	9.3

Second lowest for 8 hour shifts	**3.4**
Lowest for 8 hour shifts	**2.1**
Median for 8 hour shifts	**4.9**
Average for 8 hour shifts	**4.8**

PDI's ultra-fast technology can provide a charge from 20% to 80% state of charge in 90 minutes, which is less than the shortest available time in the above chart, far less than the second shortest, and less than half of the median and average.

2.0 Prototype Demonstration

PDI's ultra-fast charging prototype was demonstrated in the battery swapping area at the facility from June 2, 2011 through June 10, 2011. Two Exide GNB 36 volt 850 amp hour batteries, numbered 357 and 374, were provided. Battery 357 was installed in forklift truck number CA5 and battery 374 was installed in forklift truck number CA10. The batteries were charged on the truck during truck down time or were swapped with other batteries at the end of each shift, depending on the requirements of the truck operator during each shift.

The technology has previously been tested with a maximum speed of 1.5 hours, without overheating. However, based on the above battery monitor data, we determined that it was sufficient to configure the prototype to charge the provided batteries from 20% to 80% state of charge in just under three hours. Toward the end of the demonstration, we reduced the time to two and a half hours. We were able to provide these rates of charge repeatedly over a 9-day period, while never coming close to overheating the batteries. Below are the results for each charge:

N.B.: Exide GNB Company states that the maximum safe charging temperature is 60° C.

Battery ID	Date	Charge Time (Minutes)	Charge Time (Hours)	Amp Hours Delivered	Capacity Delivered	Starting ° C Temp.	Ending ° C Temp.
357	6/2/2011	39.3	0.7	115.7	13.6%	24.3	26.3
357	6/2/2011	134.5	2.2	396.1	46.6%	26.2	33.5
357	6/2/2011	46.7	0.8	137.4	16.2%	31.1	32.2
357	6/2/2011	112.3	1.9	330.7	38.9%	31.6	35.2
357	6/2/2011	2.3	0.0	6.7	0.8%	35.3	35.0
357	6/2/2011	11.4	0.2	33.5	3.9%	35.7	34.9
357	6/3/2011	96.8	1.6	285.3	33.6%	31.3	34.4
357	6/3/2011	22.8	0.4	67.1	7.9%	33.0	33.2
357	6/3/2011	134.8	2.2	397.0	46.7%	29.9	37.4
357	6/4/2011	173.1	2.9	510.0	60.0%	24.8	29.1
357	6/5/2011	24.7	0.4	72.6	8.5%	23.1	23.5
357	6/5/2011	70.6	1.2	207.7	24.4%	20.8	21.4
357	6/9/2011	153.9	2.6	510.1	60.0%	30.7	39.6
357	6/10/2011	18.7	0.3	61.6	7.2%	35.5	35.2
374	6/2/2011	21.4	0.4	62.9	7.4%	26.1	26.8
374	6/2/2011	172.8	2.9	509.1	59.9%	29.1	41.0
374	6/3/2011	9.7	0.2	28.5	3.3%	36.7	34.4
374	6/4/2011	7.2	0.1	21.0	2.5%	19.9	19.9

As this was not a permanent installation, it was not practical to install the charger near the break room. Therefore, each driver had to determine whether he would have time to go the remote battery swapping area each time that the truck was about to become idle. As a result, what was experienced was a combination of "on-board" charging and battery swapping. The results demonstrate the performance and reliability of PDI's ultra-fast charging technology.

3.0 Summary

The rapid charging system is successful if all idle time to charge the battery during a shift is utilized and the system is configured to meet battery manufacturer's recommended operational guidelines to preserve the battery warranty.

All charging is done during any available work, lunch, and shift change breaks or idle times that are practical for plug in. All that is needed is a minimum of 5 minutes to opportunity fast charge.

Time and frequency of recharge depends upon truck and battery usage.

- In the warehouse operation, there is enough downtime between and during shifts to provide opportunity fast charging in order to eliminate the need for battery swapping.
- In addition, we can provide fast charging by charging the battery all at once between shifts.
- Battery swapping is eliminated because of the 2.9-hour and 2.6-hour charging times provided during the demonstration. Please keep in mind that 1.5 hours is our fastest charging time although were did not use this level during the demonstration. Unlike other opportunity charging systems, PDI's charging technology requires an average of one hour of charge time per eight-hour shift to eliminate battery swapping compared to 2-4 hours.
- This is accomplished without overheating the battery, thereby protecting battery life, reducing costs and increasing the prospect of a favorable warranty determination by battery companies. Other opportunity charging systems control overheating by installing expensive and cumbersome fans (between $600 to $1,000 per truck) or automatically shutting off the charger when battery overheats.
- Power consumption will be similar to conventional charging. The amount of power provided to the batteries is the same, only faster, and efficiency is improved. Greater flexibility to charge during off-peak periods can be obtained through scheduled downtime or staggering breaks.
- PDI's charging technology eliminates the need for a restoration charge during the third shift. It charges batteries faster, thereby returning the battery to a higher state of charge allowing three full shifts to be completed without a restoration charge in the third shift. This eliminates the need for one charger for every truck.
- The charging algorithm performs equalization during the charge, thereby eliminating the need to perform weekly equalization charges (which can take up to 12 hours for other opportunity charging systems) and thereby eliminating the need for one charger for every truck.